ISSN 2518-170X (Online)
ISSN 2224-5278 (Print)

ҚАЗАҚСТАН РЕСПУБЛИКАСЫ
ҰЛТТЫҚ ҒЫЛЫМ АКАДЕМИЯСЫ
Satbayev University

Х А Б А Р Л А Р Ы

ИЗВЕСТИЯ

НАЦИОНАЛЬНОЙ АКАДЕМИИ
НАУК РЕСПУБЛИКИ
КАЗАХСТАН
Satbayev University

N E W S

OF THE ACADEMY OF SCIENCES
OF THE REPUBLIC OF
KAZAKHSTAN
Satbayev University

SERIES

OF GEOLOGY AND TECHNICAL SCIENCES

2 (458)

MARCH – APRIL 2023

THE JOURNAL WAS FOUNDED IN 1940

PUBLISHED 6 TIMES A YEAR

ALMATY, NAS RK

NAS RK is pleased to announce that News of NAS RK. Series of geology and technical sciences scientific journal has been accepted for indexing in the Emerging Sources Citation Index, a new edition of Web of Science. Content in this index is under consideration by Clarivate Analytics to be accepted in the Science Citation Index Expanded, the Social Sciences Citation Index, and the Arts & Humanities Citation Index. The quality and depth of content Web of Science offers to researchers, authors, publishers, and institutions sets it apart from other research databases. The inclusion of News of NAS RK. Series of geology and technical sciences in the Emerging Sources Citation Index demonstrates our dedication to providing the most relevant and influential content of geology and engineering sciences to our community.

Қазақстан Республикасы Ұлттық ғылым академиясы «ҚР ҰҒА Хабарлары. Геология және техникалық ғылымдар сериясы» ғылыми журналының Web of Science-тің жаңаланған нұсқасы Emerging Sources Citation Index-те индекстелуге қабылданғанын хабарлайды. Бұл индекстелу барысында Clarivate Analytics компаниясы журналды одан әрі the Science Citation Index Expanded, the Social Sciences Citation Index және the Arts & Humanities Citation Index-ке қабылдау мәселесін қарастыруда. Webof Science зерттеушілер, авторлар, баспашылар мен мекемелерге контент тереңдігі мен сапасын ұсынады. ҚР ҰҒА Хабарлары. Геология және техникалық ғылымдар сериясы Emerging Sources Citation Index-ке енуі біздің қоғамдастық үшін ең өзекті және беделді геология және техникалық ғылымдар бойынша контентке адалдығымызды білдіреді.

НАН РК сообщает, что научный журнал «Известия НАН РК. Серия геологии и технических наук» был принят для индексирования в Emerging Sources Citation Index, обновленной версии Web of Science. Содержание в этом индексировании находится в стадии рассмотрения компанией Clarivate Analytics для дальнейшего принятия журнала в the Science Citation Index Expanded, the Social Sciences Citation Index и the Arts & Humanities Citation Index. Web of Science предлагает качество и глубину контента для исследователей, авторов, издателей и учреждений. Включение Известия НАН РК. Серия геологии и технических наук в Emerging Sources Citation Index демонстрирует нашу приверженность к наиболее актуальному и влиятельному контенту по геологии и техническим наукам для нашего сообщества.

Бас редактор

ЖҰРЫНОВ Мұрат Жұрынұлы, химия ғылымдарының докторы, профессор, ҚР ҰҒА академигі, Қазақстан Республикасы Ұлттық Ғылым академиясының президенті, АҚ «Д.В. Сокольский атындағы отын, катализ және электрохимия институтының» бас директоры (Алматы, Қазақстан) **Н = 4**

Р е д а к ц и я л ы қ а л қ а:

АБСАДЫКОВ Бахыт Нарикбайұлы, техника ғылымдарының докторы, профессор, ҚР ҰҒА жауапты хатшысы, А.Б. Бектұров атындағы химия ғылымдары институты (Алматы, Қазақстан) **Н = 5**

ӘБСАМЕТОВ Мәліс Құдысұлы (бас редактордың орынбасары), геология-минералогия ғылымдарының докторы, профессор, ҚР ҰҒА академигі, «У.М. Ахмедсафина атындағы гидрогеология және геоэкология институтының» директоры (Алматы, Қазақстан) **Н = 2**

ЖОЛТАЕВ Герой Жолтайұлы (бас редактордың орынбасары), геология-минералогия ғылымдарының докторы, профессор, Қ.И. Сатпаев тындағы геология ғылымдары институтының директоры (Алматы, Қазақстан) **Н=2**

СНОУ Дэниел, Ph.D, қауымдастырылған профессор, Небраска университетінің Су ғылымдары зертханасының директоры (Небраска штаты, АҚШ) **Н = 32**

ЗЕЛЬТМАН Реймар, Ph.D, табиғи тарих мұражайының Жер туралы ғылымдар бөлімінде петрология және пайдалы қазбалар кен орындары саласындағы зерттеулердің жетекшісі (Лондон, Англия) **Н = 37**

ПАНФИЛОВ Михаил Борисович, техника ғылымдарының докторы, Нанси университетінің профессоры (Нанси, Франция) **Н=15**

ШЕН Пин, Ph.D, Қытай геологиялық қоғамының тау геологиясы комитеті директорының орынбасары, Американдық экономикалық геологтар қауымдастығының мүшесі (Пекин, Қытай) **Н = 25**

ФИШЕР Аксель, Ph.D, Дрезден техникалық университетінің қауымдастырылған профессоры (Дрезден, Берлин) **Н = 6**

КОНТОРОВИЧ Алексей Эмильевич, геология-минералогия ғылымдарының докторы, профессор, РҒА академигі, А.А. Трофимука атындағы мұнай-газ геологиясы және геофизика институты (Новосибирск, Ресей) **Н = 19**

АГАБЕКОВ Владимир Енокович, химия ғылымдарының докторы, Беларусь ҰҒА академигі, Жаңа материалдар химиясы институтының құрметті директоры (Минск, Беларусь) **Н = 13**

КАТАЛИН Стефан, Ph.D, Дрезден техникалық университетінің қауымдастырылған профессоры (Дрезден, Берлин) **Н = 20**

СЕЙТМҰРАТОВА Элеонора Юсуповна, геология-минералогия ғылымдарының докторы, профессор, ҚР ҰҒА корреспондент-мүшесі, Қ.И. Сатпаев атындағы Геология ғылымдары институты зертханасының меңгерушісі (Алматы, Қазақстан) **Н=11**

САҒЫНТАЕВ Жанай, Ph.D, қауымдастырылған профессор, Назарбаев университеті (Нұр-Сұлтан, Қазақстан) **Н = 11**

ФРАТТИНИ Паоло, Ph.D, Бикокк Милан университеті қауымдастырылған профессоры (Милан, Италия) **Н = 28**

«ҚР ҰҒА Хабарлары. Геология және техникалық ғылымдар сериясы».
ISSN 2518-170X (Online),
ISSN 2224-5278 (Print)

Меншіктеуші: «Қазақстан Республикасының Ұлттық ғылым академиясы» РҚБ (Алматы қ.).

Қазақстан Республикасының Ақпарат және қоғамдық даму министрлігінің Ақпарат комитетінде 29.07.2020 ж. берілген **№ KZ39VPY00025420** мерзімдік басылым тіркеуіне қойылу туралы куәлік. Тақырыптық бағыты: *геология, мұнай және газды өңдеудің химиялық технологиялары, мұнай химиясы, металдарды алу және олардың қосындыларының технологиясы.*

Мерзімділігі: жылына 6 рет.

Тиражы: 300 дана.

Редакцияның мекен-жайы: 050010, Алматы қ., Шевченко көш., 28, 219 бөл., тел.: 272-13-19 http://www.geolog-technical.kz/index.php/en/

© Қазақстан Республикасының Ұлттық ғылым академиясы, 2023

Типографияның мекен-жайы: «Аруна» ЖК, Алматы қ., Мұратбаев көш., 75.

Главный редактор

ЖУРИНОВ Мурат Журинович, доктор химических наук, профессор, академик НАН РК, президент Национальной академии наук Республики Казахстан, генеральный директор АО «Институт топлива, катализа и электрохимии им. Д.В. Сокольского» (Алматы, Казахстан) **Н = 4**

Редакционная коллегия:

АБСАДЫКОВ Бахыт Нарикбаевич, доктор технических наук, профессор, ответственный секретарь НАН РК, Институт химических наук им. А.Б. Бектурова (Алматы, Казахстан) **Н = 5**

АБСАМЕТОВ Малис Кудысович, (заместитель главного редактора), доктор геологомине ра ло-гических наук, профессор, академик НАН РК, директор Института гидрогеологии и геоэкологии им. У.М. Ахмедсафина (Алматы, Казахстан) **Н = 2**

Ж**ОЛТАЕВ Герой Жолтаевич,** (заместитель главного редактора), доктор геологоминерало-ги ческих наук, профессор, директор Института геологических наук им. К.И. Сатпаева (Алматы, Казахстан) **Н=2**

СНОУ Дэниел, Ph.D, ассоциированный профессор, директор Лаборатории водных наук универ-ситета Небраски (штат Небраска, США) **Н = 32**

ЗЕЛЬТМАН Реймар, Ph.D, руководитель исследований в области петрологии и месторождений полезных ископаемых в Отделе наук о Земле Музея естественной истории (Лондон, Англия) **Н = 37**

ПАНФИЛОВ Михаил Борисович, доктор технических наук, профессор Университета Нанси (Нанси, Франция**) Н=15**

ШЕН Пин, Ph.D, заместитель директора Комитета по горной геологии Китайского геологического общества, член Американской ассоциации экономических геологов (Пекин, Китай) **Н = 25**

ФИШЕР Аксель, ассоциированный профессор, Ph.D, технический университет Дрезден (Дрезден, Берлин) **Н = 6**

КОНТОРОВИЧ Алексей Эмильевич, доктор геолого-минералогических наук, профессор, академик РАН, Институт нефтегазовой геологии и геофизики им. А.А. Трофимука СО РАН (Новосибирск, Россия) **Н = 19**

АГАБЕКОВ Владимир Енокович, доктор химических наук, академик НАН Беларуси, почетный директор Института химии новых материалов (Минск, Беларусь) **Н = 13**

КАТАЛИН Стефан, Ph.D, ассоциированный профессор, Технический университет (Дрезден, Берлин) **Н = 20**

СЕЙТМУРАТОВА Элеонора Юсуповна, доктор геолого-минералогических наук, профессор, член-корреспондент НАН РК, заведующая лаборатории Института геологических наук им. К.И. Сатпаева (Алматы, Казахстан) **Н=11**

САГИНТАЕВ Жанай, Ph.D, ассоциированный профессор, Назарбаев университет (Нурсултан, Казахстан) **Н = 11**

ФРАТТИНИ Паоло, Ph.D, ассоциированный профессор, Миланский университет Бикокк (Милан, Италия) **Н = 28**

«Известия НАН РК. Серия геологии и технических наук».
ISSN 2518-170X (Online),
ISSN 2224-5278 (Print)

Собственник: Республиканское общественное объединение «Национальная академия наук Республики Казахстан» (г. Алматы).

Свидетельство о постановке на учет периодического печатного издания в Комитете информации Министерства информации и общественного развития Республики Казахстан **№ KZ39VPY00025420,** выданное 29.07.2020 г.

Тематическая направленность: *геология, химические технологии переработки нефти и газа, нефтехимия, технологии извлечения металлов и их соеденений.*

Периодичность: 6 раз в год.

Тираж: 300 экземпляров.

Адрес редакции: 050010, г. Алматы, ул. Шевченко, 28, оф. 219, тел.: 272-13-19

http://www.geolog-technical.kz/index.php/en/

© Национальная академия наук Республики Казахстан, 2023

Адрес типографии: ИП «Аруна», г. Алматы, ул. Муратбаева, 75.

Editorial chief

ZHURINOV Murat Zhurinovich, doctor of chemistry, professor, academician of NAS RK, president of the National Academy of Sciences of the Republic of Kazakhstan, general director of JSC "Institute of fuel, catalysis and electrochemistry named after D.V. Sokolsky» (Almaty, Kazakhstan) **H = 4**

E d i t o r i a l b o a r d:

ABSADYKOV Bakhyt Narikbaevich, doctor of technical sciences, professor, executive secretary of NAS RK, Bekturov Institute of chemical sciences (Almaty, Kazakhstan) **H = 5**

ABSAMETOV Malis Kudysovich, (deputy editor-in-chief), doctor of geological and mineralogical sciences, professor, academician of NAS RK, director of the Akhmedsafin Institute of hydrogeology and hydrophysics (Almaty, Kazakhstan) **H=2**

ZHOLTAEV Geroy Zholtaevich, (deputy editor-in-chief), doctor of geological and mineralogical sciences, professor, director of the institute of geological sciences named after K.I. Satpayev (Almaty, Kazakhstan) **H=2**

SNOW Daniel, Ph.D, associate professor, director of the labotatory of water sciences, Nebraska University (Nebraska, USA) **H = 32**

ZELTMAN Reymar, Ph.D, head of research department in petrology and mineral deposits in the Earth sciences section of the museum of natural history (London, England) **H = 37**

PANFILOV Mikhail Borisovich, doctor of technical sciences, professor at the Nancy University (Nancy, France) **H=15**

SHEN Ping, Ph.D, deputy director of the Committee for Mining geology of the China geological Society, Fellow of the American association of economic geologists (Beijing, China) **H = 25**

FISCHER Axel, Ph.D, associate professor, Dresden University of technology (Dresden, Germany) **H = 6**

KONTOROVICH Aleksey Emilievich, doctor of geological and mineralogical sciences, professor, academician of RAS, Trofimuk Institute of petroleum geology and geophysics SB RAS (Novosibirsk, Russia) **H = 19**

AGABEKOV Vladimir Enokovich, doctor of chemistry, academician of NAS of Belarus, honorary director of the Institute of chemistry of new materials (Minsk, Belarus) **H = 13**

KATALIN Stephan, Ph.D, associate professor, Technical university (Dresden, Berlin) **H = 20**

SEITMURATOVA Eleonora Yusupovna, doctor of geological and mineralogical sciences, professor, corresponding member of NAS RK, head of the laboratory of the Institute of geological sciences named after K.I. Satpayev (Almaty, Kazakhstan) **H=11**

SAGINTAYEV Zhanay, Ph.D, associate professor, Nazarbayev University (Nursultan, Kazakhstan) **H = 11**

FRATTINI Paolo, Ph.D, associate professor, university of Milano-Bicocca (Milan, Italy) **H = 28**

News of the National Academy of Sciences of the Republic of Kazakhstan. Series of geology and technology sciences.
ISSN 2518-170X (Online),
ISSN 2224-5278 (Print)
Owner: RPA «National Academy of Sciences of the Republic of Kazakhstan» (Almaty).
The certificate of registration of a periodical printed publication in the Committee of information of the Ministry of Information and Social Development of the Republic of Kazakhstan **No. KZ39VPY00025420,** issued 29.07.2020.
Thematic scope: *geology, chemical technologies for oil and gas processing, petrochemistry, technologies for extracting metals and their connections.*
Periodicity: 6 times a year.
Circulation: 300 copies.
Editorial address: 28, Shevchenko str., of. 219, Almaty, 050010, tel. 272-13-19
http://www.geolog-technical.kz/index.php/en/
© National Academy of Sciences of the Republic of Kazakhstan, 2023
Address of printing house: ST «Aruna», 75, Muratbayev str, Almaty.

NEWS of the National Academy of Sciences of the Republic of Kazakhstan
SERIES OF GEOLOGY AND TECHNICAL SCIENCES
ISSN 2224-5278
Volume 2, Number 458 (2023), 134–141
https://doi.org/10.32014/2023.2518-170X.288
UDC 621.878/625.76

© R.A. Kozbagarov[1*], M.S. Zhiyenkozhayev[2], N.S. Kamzanov[3], S.G. Tsygankov[1], A.S. Baikenzheyeva[1], 2023
[1]Academy of Logistics and Transport, Almaty, Kazakhstan;
[2]Baishev university, Aktobe, Kazakhstan;
[3]Satbayev University, Almaty, Kazakhstan.
E-mail: ryctem_1968@mail.ru

DESIGN OF HYDRAULIC EXCAVATOR WORKING MEMBERS FOR DEVELOPMENT OF MUDSLIDES

Kozbagarov Rustem Ashimovich - candidate of technical sciences, associate Professor, Department "Motor vehicles and life safety", Academy of Logistics and Transport, Almaty, Kazakhstan; 8(700)650-21-66; ryctem_1968@mail.ru; https://orcid.org/0000-0002-7258-0775;

Zhiyenkozhayev Mahsut Samuratovich - candidate of technical sciences, senior lecturer, Department "Design and Construction", Baishev university, Aktobe, Kazakhstan; 8(778)437-29-13; maksut.68@mail.ru; https://orcid.org/0000-0003-3840-4740;

Kamzanov Nurbol Sadykanovich - master of technical sciences, senior lecturer, Department "Technological machines and transport", Satbayev university, Almaty, Kazakhstan; 8(702)110-00-05; n.kamzanov@mail.ru; https://orcid.org/0000-0002-2420-8362;

Tsygankov Sergey Gennadevich - candidate of technical sciences, associate professor, Department "Motor vehicles and life safety", Academy of Logistics and Transport, Almaty, Kazakhstan; 8(777)013-04-18; ssygan@mail.ru; https://orcid.org/0000-0001-5967-0349;

Baikenzheyeva Aigyl Saparovna - candidate of technical sciences, associate professor, Department "Motor vehicles and life safety", Academy of Logistics and Transport, Almaty, Kazakhstan; 8(777)160-75-86; aigul_bkz@mail.ru; https://orcid.org/0000-0002-6013-2086.

Abstract. In Kazakhstan, more than 70 engineering anti-sedimentation protective structures are operated, most of which were put into operation in the period 1974–1985. During the same time, more than 30 mudflows were registered in the basins of mudflows, many of which were accompanied by the removal of a large amount of solid material to the protective structures, and the issues of cleaning mudflows by excavators are annual planned work of the operational divisions of Kazselezashchita. The main type of engineering protection is the construction of capital dams with village storages capable of accommodating from 100 thousand m^3 to 15 million m^3 of mudflow. The types of structures are different: dams of settling tanks and sections of stabilized channels within cities and settlements, for safe passage of post-mudflows and nanowater flows. In connection with their long-term operation, the issue of frequency, methods and means of mechanization of cleaning of silos, settling tanks, selesbass paths, and the amount of annual costs for work becomes more and more urgent. However, the issues of operating dams in the conditions of annual nanowater floods, the development of modern technologies and means of mechanization of cleaning silos from coarse clastic soils are very relevant. The value of the work consists in the development of the design and manufacture of a prototype, methods for calculating and selecting the parameters of the bucket of an excavator with a hydraulically controlled jaw for excavation during the development of large-fragment inclusions of mudslides.

Keywords: One-bucket excavator; Mudslides; Large-fragment inclusions; Engineering facilities; Hydraulically controlled jaw bucket

© Р.А. Козбагаров[1*], М.С. Жиенкожаев[2], Н.С. Камзанов[3], С.Г. Цыганков[1], А.С. Байкенжеева[1], 2023
[1]Логистика және көлік академиясы, Алматы, Қазақстан;
[2]Баишев университеті, Ақтөбе, Қазақстан;
[3]Сәтбаев университеті, Алматы, Қазақстан.
E-mail: ryctem_1968@mail.ru

СЕЛ ҚАЛДЫҚТАРЫН ӨҢДЕУГЕ АРНАЛҒАН ГИДРАВЛИКАЛЫҚ ЭКСКАВАТОРДЫҢ ЖҰМЫС ОРГАНДАРЫНЫҢ КОНСТРУКЦИЯСЫ

Аннотация. Қазақстанда 70-тен астам инженерлік селге қарсы қорғаныш құрылымдары пайдаланылуда, олардың көпшілігі 1974–1985 жылдар кезеңінде пайдалануға берілген. Осы уақыт ішінде сел қауіпті өзендердің бассейндерінде 30-дан астам сел ағындары тіркелді, олардың көпшілігі қатты материалдың көп мөлшерін қорғаныш құрылымдарына шығарумен қатар жүрді, ал сел қоймаларын экскаваторлармен тазарту мәселелері Қазселденқорғау бөлімшелерінің жыл сайынғы жоспарлы жұмыстары болып табылады. Инженерлік қорғаудың негізгі түрі сел массасын 100 мың м^3-ден 15 млн.м^3-ге дейін сыйғыза алатын су қоймалары бар күрделі бөгеттер салу болып табылады. Құрылымардың типтері әр түрлі: сел ағындарын ұстауға арналған тұйық жер және тас үйінділері, сел ағындарын ұстап қалуға арналған темірбетон бөгеттері; аркалы және өтпелі темірбетон және металлды сел ұстағыштары; селдің қатты бөлімді құрамдарын ұстауға, қалалар мен елді мекендер шегінде тұндырғыштар және тұрақтандырғыш арналардың учаскелерінің, селеден кейінгі тасқындар мен суағындарын қауіпсіз өткізуге арналған бөгеттері. Олардың ұзақ уақыт пайдаланылуына байланысты сел қоймаларын, тұндырғыштарды, селеді жібергіш арналарын тазалауды механикаландырудың кезеңділігі, әдістері мен құралдары, жұмыстарды жүргізуге жұмсалатын жыл сайынғы шығындардың көлемді мәселесі өзекті бола түсуде. Алайда жыл сайынғы су тасқыны жағдайында бөгеттерді пайдалану, ірі сынықты топырақтардан сел қоймаларын тазартуды механикаландырудың заманауи технологиялары мен құралдарын жасау мәселелері өте өзекті болып табылады. Жұмыстың құндылығы конструкцияны әзірлеу және тәжірибелік үлгісін дайындау, есептеу әдістері және жағы гидробасқарылатын экскаватор шөмішінің параметрлерін таңдау, сел тасқындарын ірі-кесекті қосындыларын өңдеу кезінде жер жұмыстарын орындау болып табылады.

Түйін сөздер: Бір шөмішті экскаватор; Селді қалдықтар; Ірі кесекті қосындылар; Инженерлік нысандар; Шөміштің жағын гидробасқару

© Р.А. Козбагаров[1*], М.С. Жиенкожаев[2], Н.С. Камзанов[2], С.Г. Цыганков[1], А.С. Байкенжеева, 2023

[1]Академия логистики и транспорта, Алматы, Казахстан;
[2]Баишев университет, Актобе, Казахстан;
[3]Сатбаев университет, Алматы, Казахстан.
E-mail: ryctem_1968@mail.ru

КОНСТРУКЦИЯ РАБОЧИХ ОРГАНОВ ГИДРАВЛИЧЕСКОГО ЭКСКАВАТОРА ДЛЯ РАЗРАБОТКИ СЕЛЕВЫХ ВЫНОСОВ

Аннотация. В Казахстане эксплуатируется более 70 инженерных противоселевых защитных сооружений, большинство из которых введено в строй в период 1974–1985 г.г. За это же время в бассейнах селеопасных рек зарегистрировано более 30 селевых потоков, многие из которых сопровождались выносом большого количества твердого материала к защитным сооружениям, а вопросы очистки селехранилищ экскаваторами являются ежегодными плановыми работами эксплуатационных подразделений Казселезащиты. Основным видом инженерной защиты является строительство капитальных плотин с селехранилищами, способными вместить от 100 тыс. м^3 до 15 млн. м^3 селевой массы. Типы сооружений различные: глухие земляные и каменно-набросные, железобетонные плотины для задержания селевых потоков; арочные и сквозные железобетонные и металлические селеуловители для перехвата твердой составляющей селя; плотины отстойников и участки стабилизированных русел в черте городов и населенных пунктов для безопасного пропуска постселевых паводков и наносоводных потоков. В связи с их длительной эксплуатацией все актуальнее становится вопрос периодичности, способах и средствах механизации очистки селехранилищ, отстойников, селесбросных трактов, объемах ежегодных затрат на проведение работ. Однако вопросы эксплуатации плотин в условиях ежегодных наносоводных паводков, разработки современных технологий и средств механизации очистки селехранилищ от крупнообломочных грунтов являются весьма актуальными. Ценность работы заключается в разработке конструкции и изготовлении опытного образца, методик расчета и выбора параметров ковша экскаватора с гидроуправляемой челюстью для выполнения земляных работ при разработке крупнообломочных включени селевых выносов.

Ключевые слова: одноковшовый экскаватор; селевые отложение; крупнообломочные включения; инженерные объекты; гидроуправляемой челюсти ковша

Introduction

In the Republic of Kazakhstan, the regions of formation of mudflows include the spurs of the Zailii Alatau, Dzungarsky, Talas Alatau, Karatau, Chu-Ili, Ketmen and Tarbagatai (Medeu, 2011: 284; Medeuov, 1993: 159; Nurmagambetov, 2015: 76; Stepanov, 1991: 380; Yafyazova, 2007: 158).

As a result of mudflows at artificial protective structures erected on their paths, accumulation of mudflows soil medium consisting of water and crushed rocks, silt, clay, sand and stones of various sizes moving at high speed occurs (Akimov, 2004: 348; Myagkov, 1995: 222). Construction and operation of anti-mudflow structures, cleaning of mudflows and debris are impossible without selection of mechanization means with effective working bodies adapted to specific mudflows soil environment (Yang, 2012: 5).

The most difficult to develop in the sections of dams, selectors are coarse clastic soils, which require the creation of special working bodies in order to increase the efficiency of the excavator, widely used in emergency situations.

The analysis of literature sources determined the main directions and trends in the development of working bodies of single-bucket excavators and their possibilities for the development of mudflows and debris. The identified main directions of development of earth-moving equipment (Balovnev, 1993: 382; Fedorov, 1990: 358; Krikun, 2001: 104) showed that there are actually no working bodies adapted to the development of coarse clastic soils of mudflows. This circumstance confirms the relevance of the problem of scientific justification of parameters and the creation of special working equipment for earthmoving machines for the development of mudflows and debris with coarse clastic inclusions.

Modern excavators include a large number of components representing complex objects, the nature of the physical processes in which largely determine the functional and operational properties of single-bucket excavators.

The analysis of information materials indicates that progress in the development of single-bucket excavators is developing in the direction of complicating their structures. An example is intensifying action working bodies, manipulative working equipment, etc. Also, this analysis of the status of the question showed that the working bodies of the traditional type of single-bucket excavators are not adapted for the effective development of mudflows with large-clastic inclusions and made it possible to outline further ways of research and formulate the purpose of this work.

Traditional structures of working elements of machines used for development of mudflows and other blockages are not adapted for performance of works under such conditions, which leads to reduction of their productivity by 20–25 %.

Therefore, the task of justifying the parameters and creating a new special-purpose working body for single-bucket excavators (SE) for the development of mudflows with large-clastic inclusions, which allows expanding the functionality of these machines, is relevant.

Justification of the main parameters of the new working equipment of the excavator (Masakazu, 2001: 12). equipped with a bucket with a hydraulically controlled jaw, which provides expansion of functional and technological capabilities during the development of coarse clastic soils of mudflows.

Materials and methods

The grain-size distribution and the total content of fractions of mudflows of river basins (Bolshaya Almatinka, Chemolgan,) of the northern slope of the Zailiysky Alatau were established, which made it possible to establish the most common types of soils that are subject to machine development during the construction of various engineering facilities (dams, mudflowers, etc.) and the cleaning of mudflows (Medeu, 2011: 284; Medeuov, 1993: 159; Nurmagambetov, 2015: 76; Yafyazova, 2007: 158).

Analysis of the total content of sediment fractions in sediments of river basins on the northern slope of the Zailiysky Alatau shows that boulders (stones) of fraction d of 200 to 1000 mm are 23,7 % (p = 0,217); pebbles (crushed stone) with fraction size d = 10–200 mm – 20,35 % (P = 0,264); gravel (dresva) with fraction size d = 2–10 mm–19.53 % (p = 0,195); sand with size of fractions d = 0.05–2 mm–28.28 % (p = 0,283); dust particles with fraction size d = 0,005 – 0,05–2,72 % (p = 0,027); clay with size of fractions d = 0,005 mm–1,42 % (p = 0,014).

The most difficult to develop in the sections of dams, selectors are coarse clastic soils with a diameter of more than 500 mm, which require the creation of special working bodies in order to increase the efficiency of traditional earthmoving machines (Buriy, 2019: 12; Kozbagarov, 2020a: 8, 2021c: 8; 2021d: 8; 2022e: 14; Makarova, 2021: 6), widely used in emergency situations.

The method of determining the geometric and kinematic parameters of the bucket of an excavator with a hydraulically controlled jaw has been developed.

The hinged working element of the hydraulic excavator for the development of mudflows containing large boulders up to 1 m in size is a multifunctional bucket with a expanding hydraulically controlled jaw (Figure 1).

Special bucket consists (Figure 1) of main part 1 to which opening part of bucket 2 is hinged on sliding bearings. Hydraulic cylinder 3 is attached to main part of bucket by means of brackets, rod of which is connected by means of levers to opening part of bucket 2.

The technological operations performed by the new working equipment of the hydraulic excavator, which has a special replaceable bucket with a hydraulically controlled jaw, are shown in Figure 4.

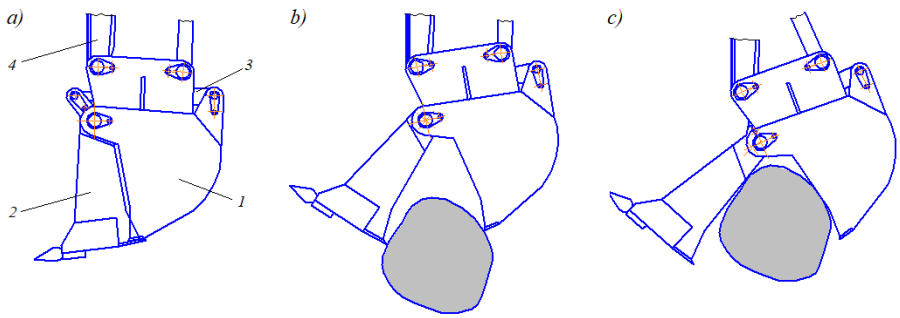

Figure 1. Technological operations of a single-bucket excavator equipped with a hydraulically controlled jaw for development of coarse clastic soils of mudflows: *a)* - is a general view of an opening jaw bucket; *b*)- filling process; *c*) - unloading process, 1-bucket; 2- jaw; 3- hydraulic cylinder; 4- handle

When meeting large boulders, the excavator operator opens the rotary part of the bucket 2, loads the large boulder up to 1 m in diameter, the reverse stroke of the rod of the hydraulic cylinder 3 lifts the large stone with the opening part 2 to the main bucket 1. Further, the driver unloads a large stone into the dump or into the vehicle by lifting the bucket.

The use of a ladle of this design in comparison with existing ladles will ensure satisfactory development of mudflow soil medium, including rocky material of large sizes.

The main purpose of the mechanism is to perform the necessary movements, which are described by means of its kinematic characteristics. These include generalized coordinates, coordinates of links and their points, and their velocities and accelerations. Kinematic characteristics include those that do not depend on the law of motion of the initial links, but are determined only by the structure of the mechanism, the size of its links and, in general, depend on generalized coordinates. These are position functions, analogues of the velocities and accelerations of the links of the mechanism and their points.

Let's analyze the hydraulically controlled jaw of the bucket of the new SE working element, the kinematic diagram of which is shown in Figure 2.

The model of spatial motion of the elements of the working element (He, 2006: 6; Togizbayeva, 2018: 6) is formed on the basis of the transformation of homogeneous coordinates of the calculated point $X^{(i)}$ in the *Oxy* coordinate system (Figure 2):

$$T = T_{0,1} \cdot X^{(i)} \; T_{0,i} = T_{0,1} \cdot T_{1,2} \cdot T_{2,3} \cdot \ldots \; T_{i-1,i}, \qquad (1)$$

where $T_{0,1}$ – is the transition matrix from the coordinate system $O\overline{xy}$ to the *Oxy* system.

Dependence (1) is the basis of kinematic and force calculations and parametric synthesis. We will rigidly connect the coordinate system with the bucket OXY. Let the coordinates OXY of hinges rigidly connected to the bucket be set relative to the coordinate system: $O(x_O, y_O)$; $N(x_N, y_N)$; $A(x_A, y_A)$; and bucket points $F(x_F, y_F)$. Linear dimensions of the jaw extension mechanism: AB, BC (length BC depends on the stroke of the hydraulic cylinder rod, the stroke of the hydraulic cylinder rod varies within: $BC_{\max}$ $BC_{\min}$), AE and EF. We define the position of all links relative to the coordinate system OXY, as well as the coordinates of the points of interest to us.

From the ABC triangle, the angle between the sides AC and AB θ_A is determined from the expression:

From triangle *ABC* the angle between AC and AB θ_A is determined from the expression:

$$\theta_A = \arccos\left(\frac{AB^2 + AC^2 - BC^2}{2AB \cdot AC}\right). \quad (2)$$

The angle that determines the position of the link AB relative to the axis OX θ_{AB} is the sum of the angles

$$\theta_{AB} = \theta_A + \theta_{AC}; \quad (3)$$

where $\theta_{AC} = \arctan\left(\frac{y_C - y_A}{x_C - x_A}\right)$.

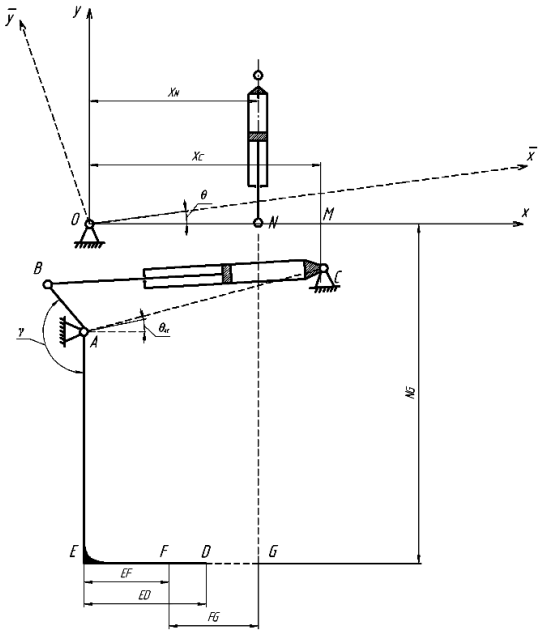

Figure 2. Kinematic diagram of bucket with jaw for development of coarse clastic soils of mudflows

Distance of AC between hinges A and C is determined by relation:

$$AC = \sqrt{(x_C - x_A)^2 + (y_C - y_A)^2}. \quad (4)$$

To determine the coordinates of the point B (Figure 5) relative to the absolute fixed coordinate OXY system, we use the formula for transforming the coordinate system while simultaneously moving and rotating the axes. Then we get:

$$\begin{Bmatrix} x_B \\ y_B \end{Bmatrix} = \begin{Bmatrix} x_A \\ y_A \end{Bmatrix} + \begin{bmatrix} \cos(\theta_{AB}) & -\sin(\theta_{AB}) \\ \sin(\theta_{AB}) & \cos(\theta_{AB}) \end{bmatrix} \begin{Bmatrix} AB \\ 0 \end{Bmatrix}. \quad (5)$$

Similarly, we define the coordinates of the point E and D mechanism using the formula for transforming the coordinate system while simultaneously moving and rotating the axes, then we have:

$$\begin{Bmatrix} x_E \\ y_E \end{Bmatrix} = \begin{Bmatrix} x_A \\ y_A \end{Bmatrix} + \begin{bmatrix} \cos(\theta_{AB} + \gamma) & -\sin(\theta_{AB} + \gamma) \\ \sin(\theta_{AB} + \gamma) & \cos(\theta_{AB} + \gamma) \end{bmatrix} \begin{Bmatrix} AE \\ 0 \end{Bmatrix}; \quad (6)$$

$$\begin{Bmatrix} x_D \\ y_D \end{Bmatrix} = \begin{Bmatrix} x_E \\ y_E \end{Bmatrix} + \begin{bmatrix} \cos\left(\theta_{AB} + \gamma + \frac{\pi}{2}\right) & -\sin\left(\theta_{AB} + \gamma + \frac{\pi}{2}\right) \\ \sin\left(\theta_{AB} + \gamma + \frac{\pi}{2}\right) & \cos\left(\theta_{AB} + \gamma + \frac{\pi}{2}\right) \end{bmatrix} \begin{Bmatrix} ED \\ 0 \end{Bmatrix}. \quad (7)$$

Thus, we have determined the coordinates of the points $B(x_B, y_B)$, $E(x_E, y_E)$ and $D(x_D, y_D)$, and relative to the local coordinate system XOY.

To determine the velocities and accelerations of the mechanism points, it is necessary to determine analogues of angular velocities and accelerations of links, as well as analogues of linear velocities and accelerations of link points of the mechanism. Analogues of angular velocities and accelerations of mechanism links are found, respectively, by single and double differentiation of closed equations of independent closed loops by generalized coordinate. In this case, regardless of the class of the mechanism, we obtain a system of linear equations regarding analogues of angular velocities or accelerations.

Similarly, we determine the true angular velocities and accelerations for the link CB, linear velocities and accelerations of points E and D mechanism.

For the case, where the boulder is gripped by simultaneously rotating the bucket and the hydraulically controlled jaw, the coordinates of the points N, C, A, B, D and F relative to the Oxy coordinate systems have also been determined when the bucket (coordinate system $O\overline{xyz}$) is rotated relative to the Oxy coordinate system by an angle θ. For this, formulas for transforming coordinate systems were used.

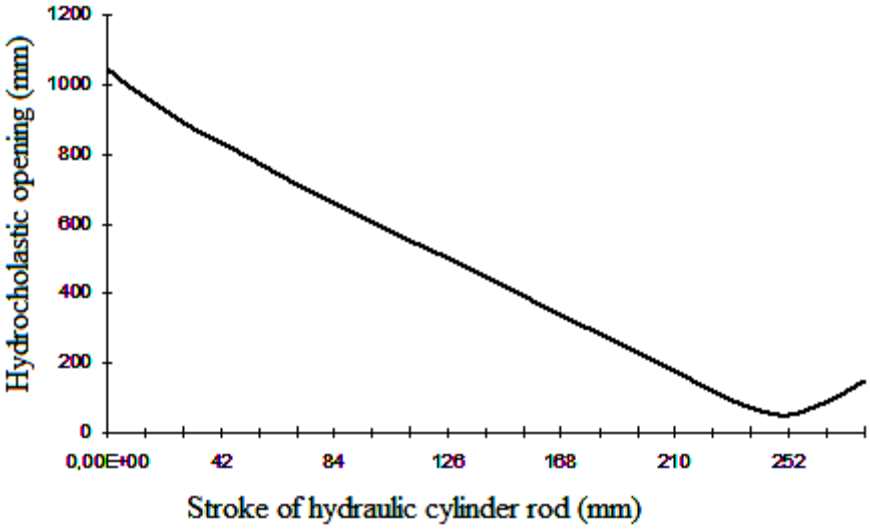

Figure 3. Dependence of bucket jaw opening on hydraulic cylinder rod travel

A program was developed for calculating the geometric, kinematic parameters of the mechanism for opening the bucket of the working equipment of a single-bucket excavator, and numerical results of coordinates, linear speeds and accelerations of points $B(x_B, y_B)$, $E(x_E, y_E)$ and $D(x_D, y_D)$, relative to the local coordinate system XOY, as well as angular speeds and accelerations of links of the mechanism for opening the hydraulically controlled jaw of the bucket were obtained. Graphic dependence of bucket jaw opening on stroke of operating equipment hydraulic cylinder rod is shown in Figure 3.

Results

Proposed design of hydraulic-controlled jaw of bucket of working equipment of single-bucket excavator allows gripping coarse clastic boulders of size up to 1 meter at maximum opening of jaw, which is provided at stroke of rod of hydraulic cylinder 280 mm.

Thus, on the basis of theoretical studies and computer modeling, numerical values of geometric parameters of the mechanism for advancing the hydrochelds of the working member of a single-bucket excavator were obtained, which made it possible to determine the dimensions of the links of the mechanism and establish the true speeds and accelerations of the points of the mechanism in question.

A prototype of a hydraulic excavator working member with a hydraulically controlled jaw was made and tested for the development of coarse clastic soils of mudflows containing large boulders up to 1 m and rubble (Figure 4).

Special ladle consists of main part 1 to which opening jaw of ladle 2 is hinged on sliding bearings 3. Hydraulic cylinder 6 is attached to main bucket by means of brackets 4, 7, rod of which is connected by means of levers to opening part of bucket.

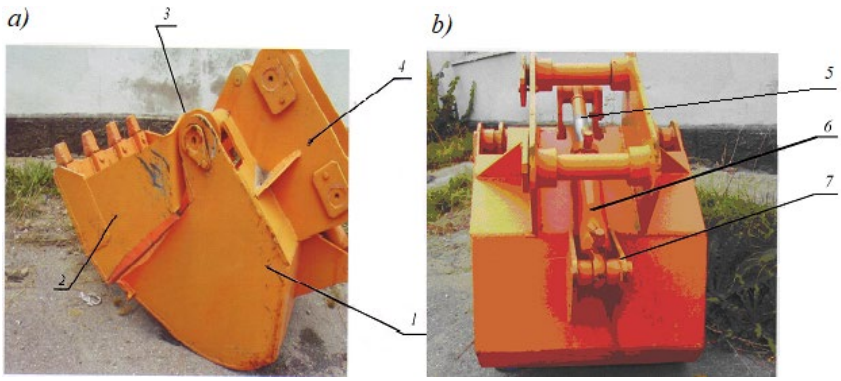

Figure 4. Excavator bucket design for development of coarse clastic soils of mudflows: *a*) - is a side view; *b)* rear view, 1- main bucket; 2 shows the opening part of the bucket; 3 - hinge;
4 - bracket for attachment of hydraulic cylinder; 5 - hydraulic cylinder rod; 6 - hydraulic cylinder; 7 - bracket

A special bucket with a capacity of 0.8 m^3 is hung on the excavator ET-14 and works as a regular bucket in the absence of large boulders in the mudflow mass.

Discussion

During the experiments, the digging process was carried out in two modes: oncoming rotation of the bucket and jaw; and in normal mode as a reverse shovel. The operability and performance of the main technological operations for the capture of coarse clastic boulders, as well as the determination of the performance of an excavator equipped with a working element with a hydraulically controlled jaw, were checked.

The experiments performed showed good performance of a special bucket, the performance of the excavator increased by 20÷30 % compared to the bucket of traditional design.

Conclusions

Based on the results of the work, the following conclusions were made:

- It has been established that the most difficult to develop in the sections of dams, selectors are coarse clastic soils, which require the creation of special RC in order to increase the efficiency of traditional earthmoving machines, widely used in emergency situations. The total content of fractions with a diameter of 200 to 1000 mm of mudflows in sediments of river basins on the northern slope of the Zailiysky Alatau is 23,7 % (p = 0,217);

– An algorithm and method for determining the positions of the links of the mechanism for opening the guide-controlled jaw of the excavator bucket have been developed, which make it possible to determine the coordinates of points of any link using formed matrices, vectors, formulas for transferring and rotating coordinate axes relative to stationary coordinate systems;

– An algorithm and method for determining the positions of the links of the mechanism for opening the guide-controlled jaw of the excavator bucket have been developed, which make it possible to determine the coordinates of points of any link using formed matrices, vectors, formulas for transferring and rotating coordinate axes relative to stationary coordinate systems.

REFERENCES

Akimov V.A., Lesnykh V.V., Radaev N.N., 2004. Risks in nature, technosphere, society and economy [Riski v prirode, tehnosfere, obshhestve i jekonomike]. Moscow: Russia. ISBN: 5-89644-065-0 (in Russ.).

Balovnev V.I., Khmara L.A., 1993. Intensification of soil development in road construction [Intensifikacija razrabotki gruntov v dorozhnom stroitel'stve]. Moscow: Russia. ISBN: 5-277-01463-2 (in Russ.).

Buriy G.G., Shherbakov V.S., Skobelev S.B., Kovalevskiy V.F. (2019) Improvement of the hydraulic excavator bucket design [Sovershenstvovanie konstrukcii kovsha gidravlicheskogo jekskavatora]. 16(3): 202-213. DOI:10.26518/2071-7296-2019-3-202-213 (in Russ.).

Fedorov D.I. (1990) Working bodies of earthmoving machines [Rabochie organy zemlerojnyh mashin]. Moscow: Russia. ISBN: 5-217-00490-8 (in Russ.).

He Qing-hua, Zhang Da-qing, Hao Peng, Zhang Hai-tao (2006). Modeling and control of hydraulic excavator arm. 13(4):422-427. DOI:10.1007/s11771-006-0061-1 (in Eng.).

Kozbagarov R.A., Zhussupov K.A., Kaliyev E.B., Yessengaliyev M.N., Kochetkov A.V., N.C. Kamzanov. (2020) Development of control suspension of attachment of a bulldozer. 4(442):166-174. DOI: https://doi.org/10.32014/2020.2518-170X.97 (in Eng.).

Kozbagarov R.A., Kamzanov N.S., Akhmetova Sh.D., Zhussupov K.A., Dainova Zh.Kh. (2021) Improving the methods of milling gauge on highways. 3(447):87-93. DOI: https://doi.org/10.32014/2021.2518-170X.67 (in Eng.).

Kozbagarov R.A., Zhussupov K.A., Kaliyev Y.B., Yessengaliyev M.N., Kochetkov A.V., 2021. Determination of energy consumption of high-speed rock digging. 6(450): 85–92. DOI: 10.32014/2021.2518-170X.123 (in Eng.).

Kozbagarov R.A., Shalbayev K.K., Zhiyenkozhayev M.S., Kamzanov N.S., Naimanova G.T., 2022. Design of cutting elements of reusable motor graders in mining. 3(453): 128–141. DOI: https://doi.org/10.32014/2022.2518-170X.185.

Krikun V.Ya., Manasyan V.G., 2001. Calculation of the main parameters of hydraulic excavators with working equipment reverse shovel. [Raschet osnovnyh parametrov gidravlicheskih jekskavatorov s rabochim oborudovaniem obratnaja lopata]. Moscow: Russia. ISBN: 5-93093-101-1 (in Russ.);

Makarova V.V., Lagunova Yu.A., Kovyazin R.A., Nesterov V.I., 2021. A new approach to creation of hydraulic excavators [Novyj podhod k sozdaniju gidravlicheskih jekskavatorov]. 6: 9–14. DOI:10.26730/1816-4528-2021-6-9-14 (in Russ.).

Masakazu Haga,Watanabe Hiroshi, Kazuo Fujishima, 2001. Digging control system for hydraulic excavator. 11(6): 665–676. DOI:10.1016/S0957-4158(00)00043-X (in Eng.).

Medeu A.R., 2011. Mudflow phenomena in the Southeast Kazakhstan. Management basics. [Selevye javlenija Jugo-Vostochnogo Kazahstana: Osnovy upravlenija]. Almaty: Kazakhstan. ISBN: 978-601-7150-26-6 (in Russ.).

Medeuov A., Kolotilin N.F., Keremkulov V.A., 1993. Mudflow of Kazakhstan [Seli Kazakhstana]. Almaty: Kazakhstan. ISBN: 5-628-00983-0 (in Russ.).

Myagkov S.M., 1995. Geography of natural risk [Geografija prirodnogo riska]. Moscow: Russia. ISBN: 5-211-03420-1 (in Russ.).

Nurmagambetov Ф., 2015. Seismic history of Almaty [Sejsmicheskaja istorija Almaty]. Saarbruecken, Germany. ISBN: 978-3-659-46015-9 (in Russ.).

Stepanov B.S., Stepanova T.S., 1991. Mechanics of mudflows: Experiment, theory, calculation methods [Mehanika selej: Jeksperiment, teorija, metody rascheta]. Moscow: Russia. ISBN 5-286-00756-2 (in Russ.).

Togizbayeva B.B., Sazambayeva B.T., Kenesbek A.B., Kinzhebayeva A.S., 2018. Calculation method of the working body of a hydraulic excavator [Metodika rascheta rabochego organa gidravlicheskogo jekskavatora]. №4(125): 75–80. DOI:10.32523/2616-7263-2018-125-4-75-80 (in Russ.).

Yafyazova R.K., 2007. The nature of the mudflows of the Trans-Ili Alatau. Problems of adaptation [Priroda selej Zailijskogo Alatau. Problemy adaptacii]. Almaty: Kazakhstan. ISBN: 9965-32-043-8 (in Russ.).

YANG Cheng, HUANG Kui, LI Yinwu, WANG Jingchun, ZHOU Meng, 2012. Review for Development of Hydraulic Excavator Attachment. 3(2): 93–97. DOI:10.3968/j.est.1923847920120302.386 (in Eng.).

CONTENTS

A.E. Abetov, Sh.B. Yessirkepova, J. Curto Ma
REMOTE SENSING AT THE STUDY OF THE THERMAL FIELD OF THE SOUTH USTYURT REGION TO FIND HYDROCARBON DEPOSITS…….....6

K.I. Akhmetov, G.M. Yessilkanov, A.Zh. Kassanova, A.V. Ubaskin, T.Zh. Abylkhassanov
HYDROGEOCHEMICAL FEATURES OF THE WATER OF SALINE LAKES IN PAVLODAR REGION……...17

S.V. Gladyshev, K.Sh. Akhmetova, L.M. Imangalieva, A.K. Kasymzhanova, N.K. Akhmadieva
STUDY OF PURIFICATION OF COPPER ELECTROREFINING
SOLUTION BY FLOW CENTRIFUGATION…….26

D.A. Davronbekov , X.F. Alimdjanov, K.S. Chezhimbayeva
METHODS FOR REMOTE MONITORING OF BRIDGES UNDER THE INFLUENCE
OF GROUNDWATER ON THEM……...37

ZH.E. Daribayev, A.N. Kutzhanova, G.I. Issayev, I.G. Ikramov, D.U. Seksenova
ASSESSMENT OF ENVIRONMENTAL DAMAGE OF NON–FERROUS METALLURGY WASTE TO THE ENVIRONMENT…….48

K.R. Dzhabagieva, G.V. Degtyarev, A.M. Baytelieva, S.M. Laiyk, R.A. Pernebayeva
FINITE ELEMENT STUDIES OF FLOW PROCESSES IN HYDROCYCLONES AND LOSS OF HEAD-ON FLOW MIXING……57

R.I. Yegemberdiev, I.N. Stolpovskikh, A.D. Kolga
IMPROVEMENT OF THE SYSTEM OF EXPLOSIONS OF RING HOLES DURING THE DEVELOPMENT OF LOW-POWER ORE DEPOSITS……..68

A.A. Yerzhan, P.V. Boikachev, S. Virko, Z.D. Manbetova, P.A. Dunayev
A NEW METHOD OF MATCHING THE SYNTHESIS OF MATCHING DEVICES BASED ON MODIFIED APPROXIMATION IN TELECOMMUNICATION DEVICES…….77

N.Zh. Zholamanov, S.M. Koibakov, S.T. Abildayev, G.A. Sarbassova, M.T. Omarbekova
RECOMMENDATIONS FOR THE USE AND DESIGN OF FISH PROTECTION AND FISH PASSING STRUCTURES UNDER GEOLOGICAL CONDITIONS……...85

L.Z. Issayeva, E. Slaby, S.K. Assubayeva, M.K. Kembayev, K.S. Togizov
THE THREE–DIMENSIONAL MODEL OF THE AKBULAK RARE EARTH DEPOSIT (NORTHERN KAZAKHSTAN)……..96

A.A. Kabdushev, F.A. Agzamov, B.Zh. Manapbaev, D.N. Delikesheva, D.R. Korgasbekov
STYDING THE EFFECT OF REINFORCEMENT ON THE PROPERTIES OF PLUGGING MATERIALS WITH EXPANDING ADDITIVES……...108

Y.M. Kalybekova, A.K. Zauirbek, N.N. Balgabayev, T.S. Ishangalyev, Y.K. Auelbek, A.V. Cravchuk
IMPROVEMENT OF THE WATER DISTRIBUTION MANAGEMENT SCHEME ON IRRIGATION SYSTEMS USING HYDROLOGICAL INFORMATION……...118

N.Zh. Karsakova, K.T. Sherov, B.N. Absadykov, M.R. Sikhimbayev, G.M. Tussupbekova
THE ISSUES OF IMPROVING THE TECHNOLOGY FOR MACHINING THE LARGE DIAMETER HOLES OF THE LARGE–SCALE PARTS OF THE TECHNOLOGICAL EQUIPMENT……..126

R.A. Kozbagarov, M.S. Zhiyenkozhayev, N.S. Kamzanov[3], S.G. Tsygankov, A.S. Baikenzheyeva
DESIGN OF HYDRAULIC EXCAVATOR WORKING MEMBERS FOR DEVELOPMENT OF MUDSLIDES..134

E.I. Kuldeyeev, M.B. Nurpeissova, Z.A. Yestemesov, A.A. Ashimova, A.V. Barvinov
OBTAINING AGLOPORITE FROM ASH OF EKIBASTUZ COAL SELECTED FROM ASH DUMP OF CRPP-3 OF ALMATY CITY……142

A.S. Madibekov, L.T. Ismukhanova, A.O. Zhadi, B.M. Sultanbekova, E.D. Zhaparkulova
MICROPLASTICS IN THE AQUATIC ENVIRONMENT: OVERVIEW OF THE PROBLEM AND CURRENT RESEARCH AREAS……..149

Y.G. Neshina, A.D. Mekhtiyev, V.V. Yugay, A.D. Alkina, P.Sh. Madi
DEVELOPING A SENSOR FOR CONTROLLING THE PIT WALL DISPLACEMENT……...160

M.B. Nurpeissova, Z.A. Yestemesov, A.A. Век, V.S. Kim, G.K. Syndyrbekova
MAIN CHARACTERISTICS OF FLY ASH FROM EKIBASTUZ SRPP-2…….168

N.D. Spatayev, G.S. Sattarova, A.D. Nurgaliyeva, L. Kh. Balabas, F.K. Batessova
ENSURING HEALTHY AND SAFE WORKING CONDITIONS IN BREAKAGE FACE WITH DIRECT-FLOW VENTILATION SCHEME……..177

V.M. Shevko, A.M. Nurpeisova, D.K. Aitkylov, A.A. Joldassov
THERMODYNAMIC PREDICTION AND EXPERIMENTAL PRODUCTION OF SILICON ALLOYS FROM TAILINGS LEACHING OF OXIDIZED COPPER ORE ALMALY……188

Publication Ethics and Publication Malpractice in the journals of the National Academy of Sciences of the Republic of Kazakhstan

For information on Ethics in publishing and Ethical guidelines for journal publication see http://www.elsevier.com/publishingethics and http://www.elsevier.com/journal-authors/ethics.

Submission of an article to the National Academy of Sciences of the Republic of Kazakhstan implies that the described work has not been published previously (except in the form of an abstract or as part of a published lecture or academic thesis or as an electronic preprint, see http://www.elsevier.com/postingpolicy, that it is not under consideration for publication elsewhere, that its publication is approved by all authors and tacitly or explicitly by the responsible authorities where the work was carried out, and that, if accepted, it will not be published elsewhere in the same form, in English or in any other language, including electronically without the written consent of the copyright-holder. In particular, translations into English of papers already published in another language are not accepted.

No other forms of scientific misconduct are allowed, such as plagiarism, falsification, fraudulent data, incorrect interpretation of other works, incorrect citations, etc. The National Academy of Sciences of the Republic of Kazakhstan follows the Code of Conduct of the Committee on Publication Ethics (COPE, and follows the COPE Flowcharts for Resolving Cases of Suspected Misconduct (http://publicationethics.org/files/u2/New_Code.pdf). To verify originality, your article may be checked by the Cross Check originality detection service http://www.elsevier.com/editors/plagdetect.

The authors are obliged to participate in peer review process and be ready to provide corrections, clarifications, retractions and apologies when needed. All authors of a paper should have significantly contributed to the research.

The reviewers should provide objective judgments and should point out relevant published works which are not yet cited. Reviewed articles should be treated confidentially. The reviewers will be chosen in such a way that there is no conflict of interests with respect to the research, the authors and/or the research funders.

The editors have complete responsibility and authority to reject or accept a paper, and they will only accept a paper when reasonably certain. They will preserve anonymity of reviewers and promote publication of corrections, clarifications, retractions and apologies when needed. The acceptance of a paper automatically implies the copyright transfer to the National Academy of Sciences of the Republic of Kazakhstan.

The Editorial Board of the National Academy of Sciences of the Republic of Kazakhstan will monitor and safeguard publishing ethics.

Правила оформления статьи для публикации в журнале смотреть на сайтах:
www:nauka-nanrk.kz
http://www.geolog-technical.kz/index.php/en/
ISSN 2518-170X (Online),
ISSN 2224-5278 (Print)

Заместитель директор отдела издания научных журналов НАН РК *Р. Жәлиқызы*
Редакторы: *М.С. Ахметова, Д.С. Аленов*
Верстка на компьютере *Г.Д.Жадыранова*

Подписано в печать 14.04.2023.
Формат 70x90 1/16. Бумага офсетная. Печать – ризограф.
20,0 п.л. Тираж 300. Заказ 1.

Национальная академия наук РК
050010, Алматы, ул. Шевченко, 28, т. 272-13-19